ACT-1B Programmable Panel Tachometer

Description

The ACT-1B is an economical and easy to use digital tachometer that displays rotational speed directly in RPM or RPS on a 5 digit red 0.56" high LED display using a speed sensor providing a single (or multiple) pulse(s) per revolution. The number of pulses per rev is factory set at time of ordering and can be user programmed from 1 to 999 using the optional PM Remote Software and USB programming cable. Power may be either universal 100 to 240Vac (50/60Hz) or optionally 12 Vdc or 24 Vdc isolated. The ACT-1B accepts input signals from optical, proximity, magnetic, infrared or laser sensors, or direct TTL or external ac inputs. The ACT-1B is suitable for panel mounting or bench top use with convenient screw terminal connections on the rear panel of the instrument.

If specified at time of order placement, the ACT-1B may be optionally equipped with either an analog output of 4-20mA or 0-5Vdc proportional to speed, and/or a TTL pulse repeater output.

Features

- Economically priced
- 1/8 DIN sized
- 5 Digit LED display
- 5 to 99,999 RPM range
- Universal sensor inputs
- Compatible with most speed sensors
- User configurable*
- View real-time data on PC*
- Store data in Excel File in real-time*
- Universal A/C power 100 to 240 Vac, 50/60Hz or optional DC input power
- Optional 4-20mA or 0-5Vdc scalable output

*Requires optional USB programming cable and PM Remote Software

Typical Uses

- Process monitoring
- Research and Development
- Field testing
- Engine Performance
- Control Panels
- Marine testing
- Utilities
- Manufacturing
- Quality Control
- Predictive Maintenance

MONARCH INSTRUMENT

Made in USA

ACT-1B Programmable Panel Tachometer

PM Remote Software

PM (Panel Meter) Remote Software is a Windows™ based software application that allows the user to customize the configuration of the ACT-1B. Set the mode of operation to RPM, RPS or Frequency and select the input scale (pulses per revolution). In addition, the decimal places displayed can be selected as well as the output scale of the optional analog output module. Configurations can be saved and quickly reloaded.

The user can set the input pulse trigger and optional output pulse to be positive or negative.

Real-time data can be displayed directly on the PC along with Min and Max values.

Data can be streamed directly into Microsoft Excel™ with one simple mouse click.

PM Remote Software is included when purchasing the optional USB programming cable. Complete instructions are included on software CD.

Real-time display

Rear Panel

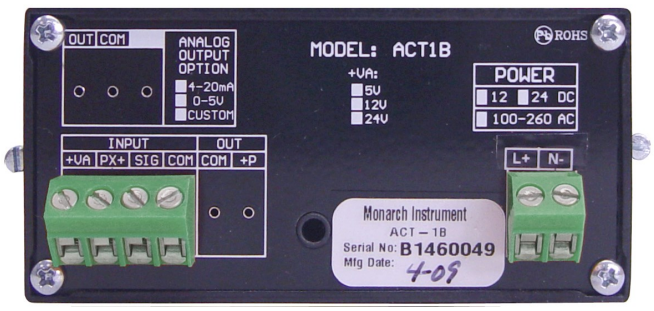

Configuring Basic Features

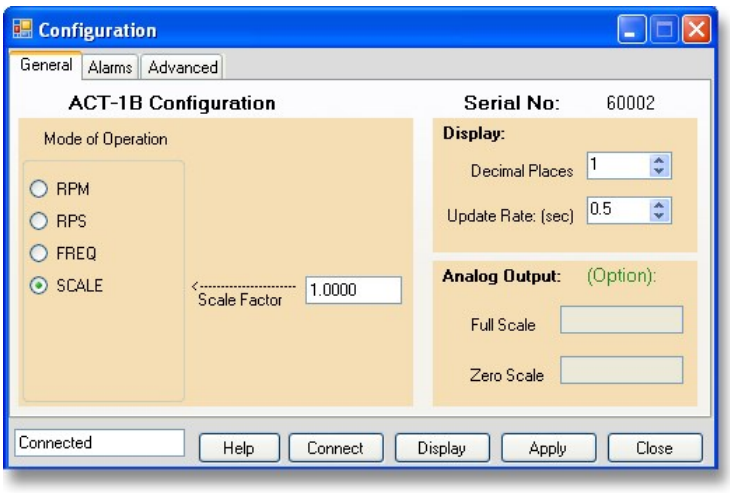

Configuring Advanced Features

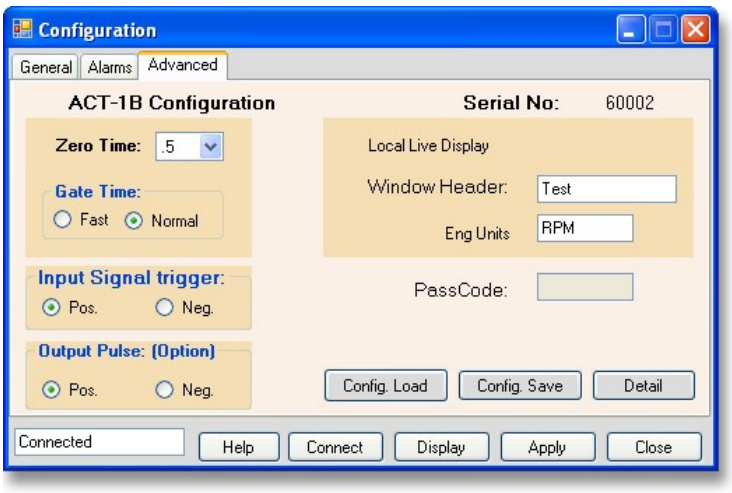

USB Programming Cable connects directly to the rear of the ACT-1B. PM Remote Software is included.

MONARCH INSTRUMENT
15 Columbia Drive
Amherst, NH 03031
Phone: (603) 883-3390
Fax: (603) 886-3300
www.monarchinstrument.com
sales@monarchinstrument.com

ACT-1B Programmable Panel Tachometer

Specifications

Range:	5 to 99,999 RPM
Accuracy:	±1 RPM or 0.005% of reading
Resolution:	1 RPM
Display:	5 digit, 0.56" (14 mm) high red LED
Display Update:	Twice per second above 120 RPM. Programmable with PM Remote Software and USB programming cable.
Dimensions:	1/8 DIN by 4.5" (114 mm) deep
Power Supply:	Standard: 100 - 240 Vac ±10%, 50/60 Hz Optional: 12 or 24 Vdc ±10%, Isolated, 5.0 Watts
Inputs:	Universal input for optical, proximity, two wire or three wire magnetic, infrared or laser sensors. TTL input or 1.5 Vac to 50 Vac input Standard input is 1 pulse per revolution. Programmable using PM Remote Software and USB programming cable.
Sensor Excitation:	12 Vdc at 5 mA for proximity sensors. 12 Vdc at 75 mA for all other sensors (Optional 5 or 24Vdc available).
Recommended Sensors:	Optical - Monarch ROS-W Proximity - Monarch P5-11 Magnetic - Monarch M-190W or MT-190W Infrared - Monarch IRS-W Laser - Monarch ROLS-W
IO Option:	4 to 20 mA out, 16 bit resolution 12Vdc compliance voltage. Full scale RPM settings as specified when ordered or programmable using PM Remote Software and USB programming cable.
AO Option:	0 to 5 Vdc out, 5 mA 16 bit resolution. Full scale RPM settings as specified when ordered or programmable using PM Remote Software and USB programming cable.
PO Option:	0 to 5 V TTL pulse, non-inverting, one pulse out for each pulse in. Positive or negative out. Programmable using PM Remote Software and USB programming cable.
Environmental:	Indoor use only, Installation category II per IEC 664 **Temperature:** -10°C to 50°C operating per IEC 61010-1 **Humidity:** Maximum relative humidity 80% for temperatures up to 31°C, decreasing linearly to 50% relative humidity at 40°C.
Electrical Safety:	Meets EN61010-1:2001, EC low voltage directive 72/23/EEC and 89/336/EEC.

RoHS CE

Dimensions

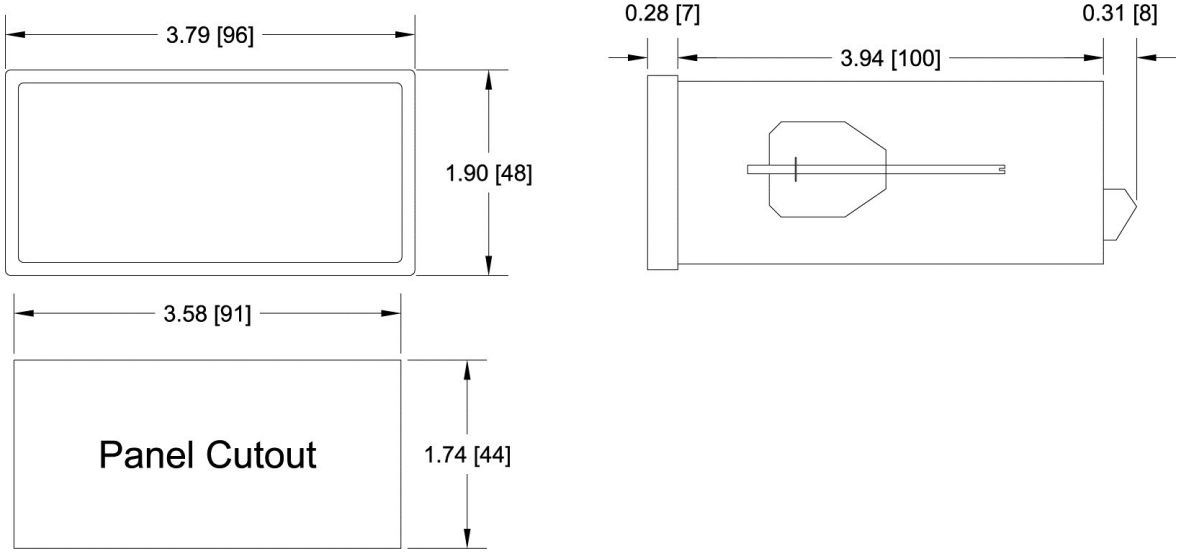

Dimensions are in inches [mm]

MONARCH INSTRUMENT
15 Columbia Drive
Amherst, NH 03031
Phone: (603) 883-3390
Fax: (603) 886-3300
www.monarchinstrument.com
sales@monarchinstrument.com

ACT-1B Programmable Panel Tachometer

Ordering Information

To specify your ACT-1B, select options from the list below. Insert your selection in the boxes above and the cost of each option in the boxes to the left. Analog output, full scale setting and pulse input ranges selected below must be factory preset or can be user configured with the optional USB programming cable and PM Remote Software (see accessories below).

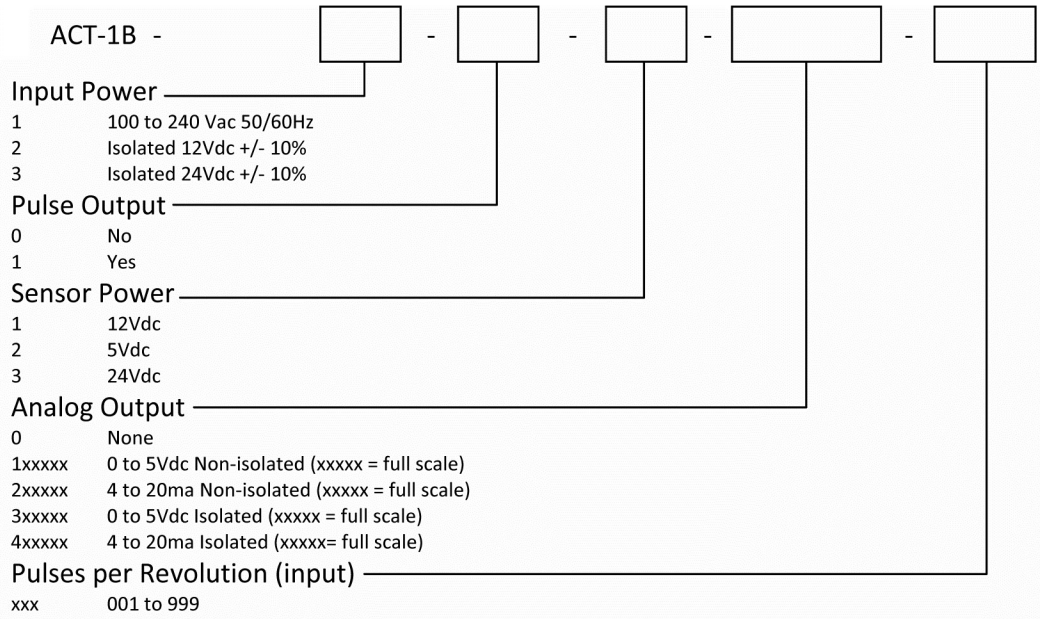

Example Model Number: ACT-1B operating from AC input power with pulse output, sensor supply of 12Vdc, and Non-isolated 4-20mA output with full scale output scale set at 10,000RPM and 60 pulses per revolution would be **Model #: ACT-1B-1-1-1-210000-060**

Accessories

6180-031	**USB Programming Cable and Software (supplied on CD)**	3 ft. USB Programming Cable and Windows™ compatible PM Remote Software Package. Allows user configuration of operation mode, analog output scaling, decimal places, display update rate and pulses per input. View real time data in digital format and/or through Microsoft® Excel.
1064-2022-001	**WIRE PER FOOT**	3-wire shielded Sensor Cable, bulk lengths for any sensor. Specify Total Length.
6180-070	**T-5**	Reflective Tape - 5 foot roll, 0.5 inch wide
6180-079	**T-5WP**	Waterproof reflective tape (honeycomb pattern) - 5 foot roll, 1 inch wide
6180-CAL	**Calibration - N.I.S.T.**	N.I.S.T. Traceable Certificate of Calibration / Re-calibration

Sensors

6180-030	**ROLS-W**	Remote Optical Laser Sensor with 8 foot cable, 4 tinned leads, mounting bracket with jam nuts and 12 inches of T-5 tape.
6180-056	**ROS-W**	Remote Optical Sensor with 8 foot cable, mounting bracket and 12 inches of reflective tape
6180-057-25	**ROS-P-25**	Remote Optical Sensor with 25 foot cable, mounting bracket and 12 inches of reflective tape
6180-058-25	**ROS-HT-W-25**	Same as 6180-056 for high temperature applications to 257°F (125°C) with 25 foot cable
6180-013	**P5-11**	Proximity Sensor with 6 foot cable
6180-018	**MT-190W**	Magnetic Trigger Sensor/Amplifier with 8 foot cable
6180-012	**M-190W**	Magnetic Sensor with 8 foot cable
6180-019	**GE-200**	Gasoline Engine Electromagnetic Inductive Sensor and amplifier with 23 feet of cable.
6180-021	**IRS-W**	Infrared Sensor with 8 foot cable, tinned wires and mounting bracket.

MONARCH INSTRUMENT
15 Columbia Drive
Amherst, NH 03031
Phone: (603) 883-3390
Fax: (603) 886-3300
www.monarchinstrument.com
sales@monarchinstrument.com